Technical Data Information

R.T. LARGE
ESTABLISHED 1969

Product Code: UV004

Information: Victorian Basin Shower Mixer

Overall Dimensions: H: 255 x D: 190

Exposed Dimensions: H: 210 x D: 190

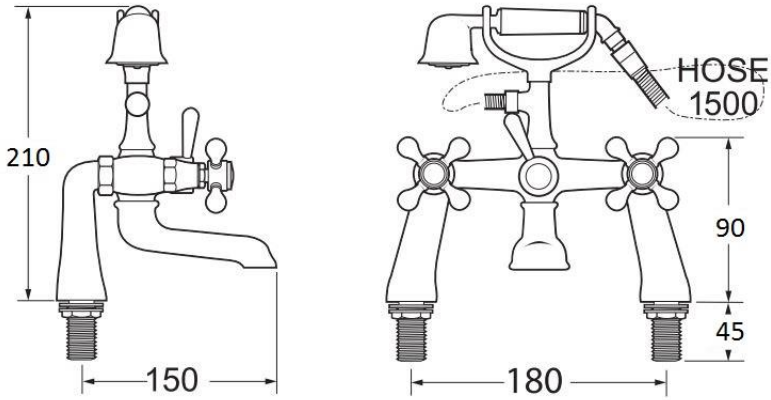

All Dimensions are in millimetres. The information contained on this page was correct at date of issue. Fitting dimensions are provided as a guide only. Some variation may occur due to manufacturing tolerances. We pursue a policy of continuing improvement in design and performance of our products and so reserve the right to change specifications without prior notice.